Model 545RR Instructions

WARNING: Bikes or rack falling in road can cause serious accidents resulting in bodily injury—do not use rack on any vehicle on which it can not be properly mounted as described in this instruction sheet.

- Rack should only be used on vehicles with 2" receiver hitches.
- **NEVER** use on trailers or front of vehicles.
- Bikes must be tied to rack using tie-downs, or additional straps if necessary.
- Check periodically during use that all bolts and pins are tight, and that rack and bicycles are secure.
- Never carry more than 4 bikes (**max capacity 140 LB**) - no tandems, mopeds, or recumbents. Car tail lights must remain visible.
- Drive conservatively, especially over bumps. Never use off-road.
- Do not use if any part of the rack is damaged, worn, or missing. Contact R. A. Allen Co., Inc. for replacement parts.

CAUTION: Use Allen 545RR only in accordance with local motor vehicle and traffic regulations.

- Install rack and load bicycles only at a safe distance away from moving traffic.
- Make sure that all of rack and bicycles are kept at a safe distance from road and hot exhaust.
- Only operate vehicle with rack in an upright, locked position.
- Bicycles should never extend beyond sides of vehicle.
- Remove rack from car, or fold carry arms down when not in use.

A. PARTS:

545RR BOX SHOULD CONTAIN THE FOLLOWING ITEMS:

1—HITCH INSERT

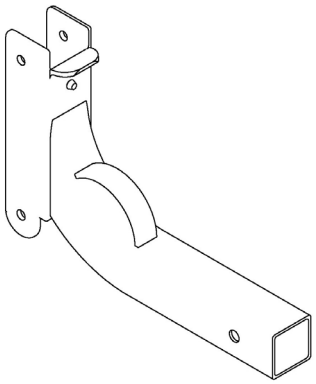

1—CARRY ARM ASSEMBLY

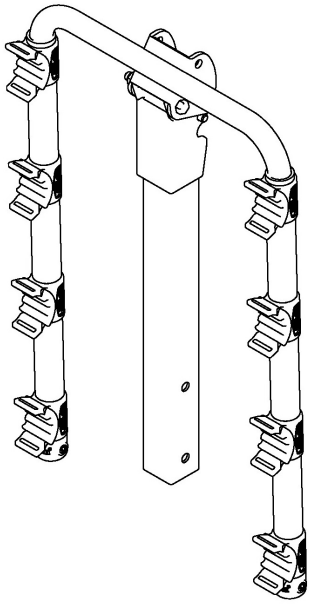

1—RR POST

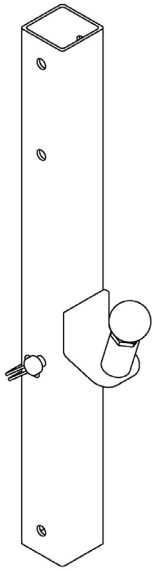

1—HARDWARE KIT,
CONTAINING

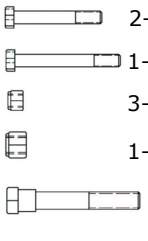

- 2—3/8" x 2 1/2" BOLT
- 1—3/8" x 3" BOLT
- 3—3/8" LOCK NUT
- 1—1/2" LOCK NUT
- 1—1/2" NO-WOBBLE BOLT

1—70" BOTTOM STRAP

B. ASSEMBLING RACK:

TOOLS REQUIRED: 2—9/16" WRENCH & 2—3/4" WRENCH; OR 2—ADJUSTABLE WRENCHES

STEP 1

- INSERT LOWER PORTION OF RR POST INTO HITCH INSERT SO THAT THE HOLES AT THE BOTTOM OF EACH PART LINE UP.
- INSERT THE 3/8" X 3" BOLT THROUGH THE HOLE, AND THREAD 1—3/8" LOCK NUT ONTO THE END OF THE BOLT.
- PIVOT THE RR POST INTO THE UPRIGHT POSITION, SO THAT THE POP-UP PIN SNAPS INTO PLACE. INSERT THE QR CLIP THROUGH THE HOLES, AND SECURE THE WIRE RETAINER CLIP.
- TIGHTEN NUT AND BOLT FIRMLY USING TWO WRENCHES.

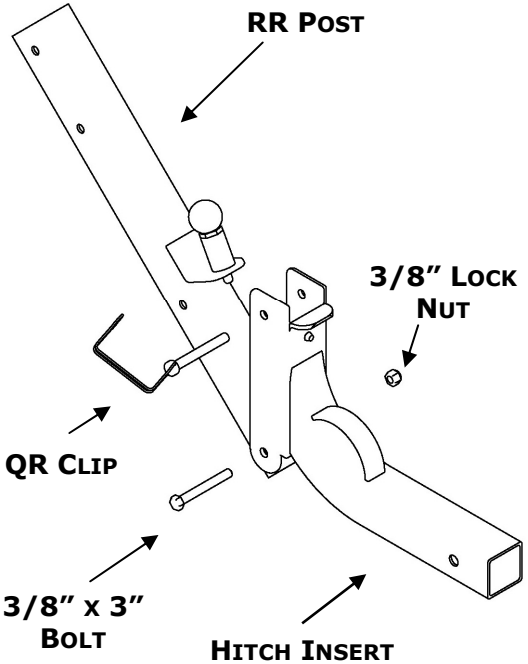

STEP 2

- INSERT CARRY ARM ASSEMBLY INTO UPPER PORTION OF RR POST, LINING UP THE HOLES IN EACH PART.
- INSERT THE 3/8" X 2 1/2" BOLTS THROUGH EACH HOLE, AND THREAD 1—3/8" LOCK NUT ONTO THE END OF THE BOLTS.
- TIGHTEN NUT AND BOLT FIRMLY USING TWO WRENCHES.

NOTE: UPON COMPLETION, BOTH PARTS SHOULD BE FIRMLY JOINED TOGETHER.

IMPORTANT:
WHEN RACK IS IN AN UPRIGHT POSITION, WIRE RETAINER ON QR CLIP SHOULD ALWAYS BE IN A CLOSED POSITION TO KEEP RACK FROM FALLING OVER DURING USE.

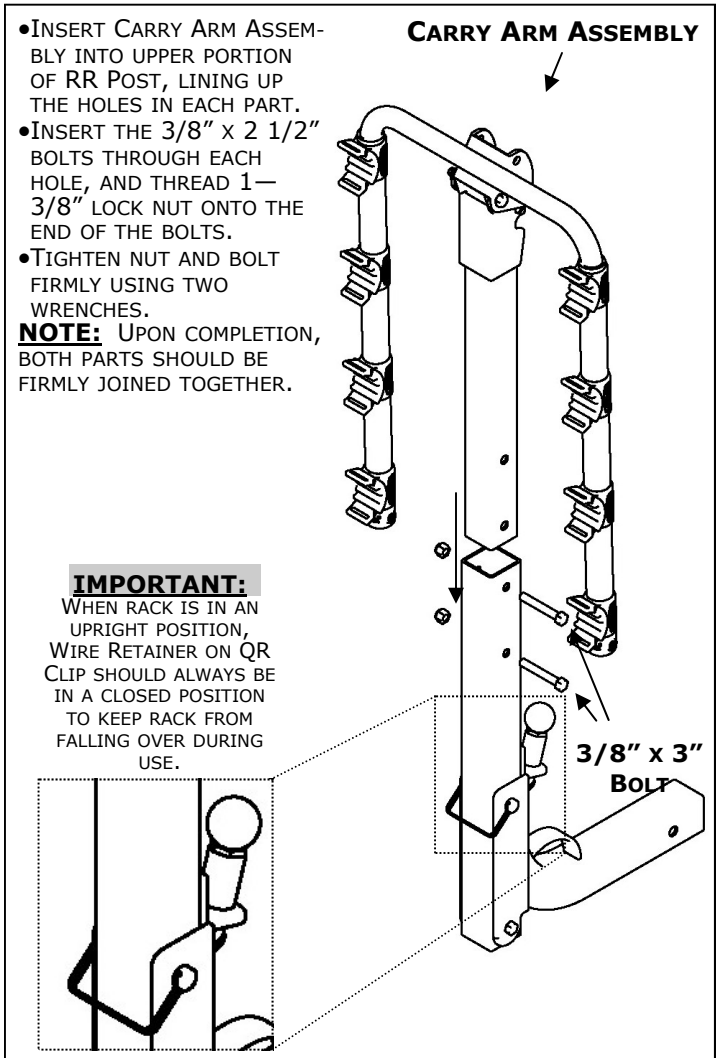

C. Installing rack onto Vehicle:

Model 545RR should only be used on 2" receiver hitches installed on automobiles. Never use this rack on a trailer.

- With arms in folded position, insert rack into receiver hitch. Line up hole in the base with hole of receiver hitch.
- Insert No-Wobble Bolt into hole, making sure that the shoulder of the bolt comes against receiver rack inside of hitch.
- Tighten firmly using two - 3/4" wrenches. There should not be any movement of the rack inside of the hitch when done.

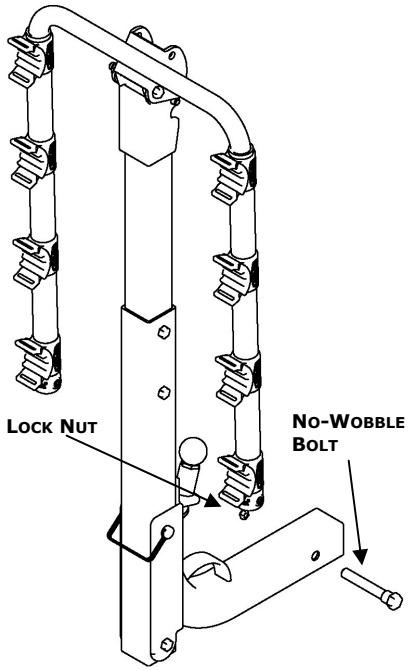

D. Folding up Carry Arms:

- To fold up carry arms, squeeze together the two yellow tabs on the back of the Carry Arm Assembly, and swing carry arms into upright position.
- The pins connected to these tabs should "snap" into place to hold the carry arms in an upright position.
- Reversing this process will keep the carry arms locked in a down position.
- If both pins on your rack do not properly engage the carry arms in the upright position, do not use your rack, and contact R. A. Allen Co..

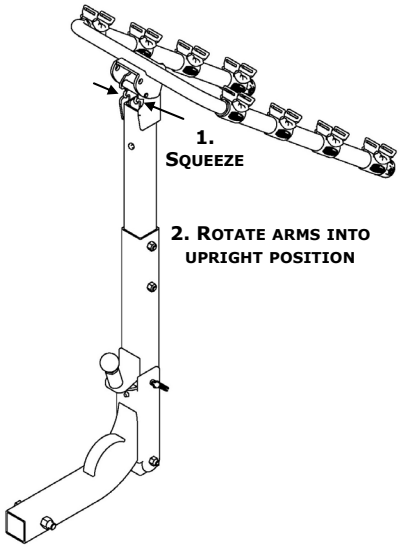

E. Loading Bicycles on Rack:

1. Remove all loose items from bicycles (pumps, bags, etc.), and check that all quick release hubs are tight.
2. Load first bicycle with its chain and gears facing away from rack. Make sure that bicycles do not come in contact with vehicle.
3. Load subsequent bicycles in alternating directions. For best weight distribution, load heaviest bicycles first, with lighter bicycles on the outside. Add padding between bicycle contact points, if necessary.
4. After bicycles are loaded, check that entire rack is secure and that No-Wobble Bolt is tight, and that the rack is still firmly in place. Vision out of rear window may be restricted—use side mirrors accordingly when backing up.

Special note on installing women's style frames:

Place one carry arm under front top tube. With the other carry arm, rotate tie-down cradle, and place carry in space behind seat tube and below rear down-stay. The **Allen 900B Adaptor Bar** is also recommended for this application.

F. Securing Bikes to Rack:

All bikes must be securely tied to rack. Use individual tie-down straps, or additional straps if necessary.

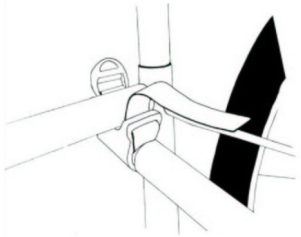

1. Place bicycle in cradle.

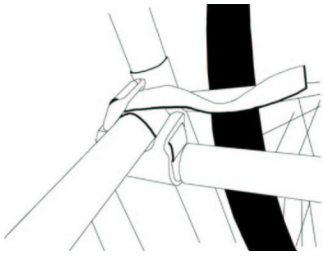

2. Thread straps.

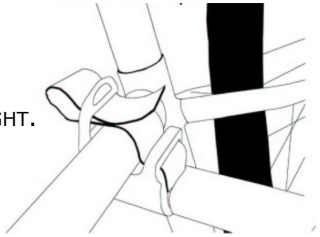

3. Pull strap tight.

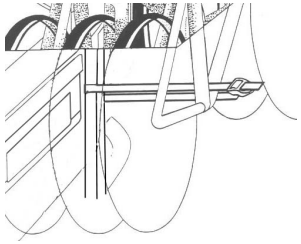

4. Use 70" strap to pull all bicycles together around bottom brackets. Strap should also secure wheels.

Allen Lifetime Warranty:

If an Allen Bike Rack is found to have a defect in workmanship or material over the lifetime of the original purchaser, Allen will repair or replace the rack free of charge.

R. A. Allen Co., Inc.
505 Beachland Blvd.—Suite 5
Vero Beach, FL 32963
(800) 722-5536
Fax: (772) 234-5796
www.allenracks.com - customerservice@allenracks.com